Installation Manual

for

GSM3E-3V & 3VK Wireless GSM Intercom System

Installation

1) Before you install this equipment, please read this full manual.

2) Ensure that there is good network reception at the location where it will be installed.

3) As per Fig 1, install the speech panel on the front of the pillar.

4) Install the antenna as high as possible on the top of the pillar to ensure line of sight in all directions for best possible reception.

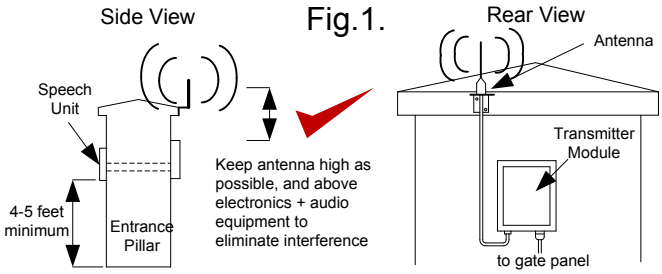

Wiring

5) Use multi-core cable between the speech panel and transmitter, and the screened coax cable provided for the microphone.

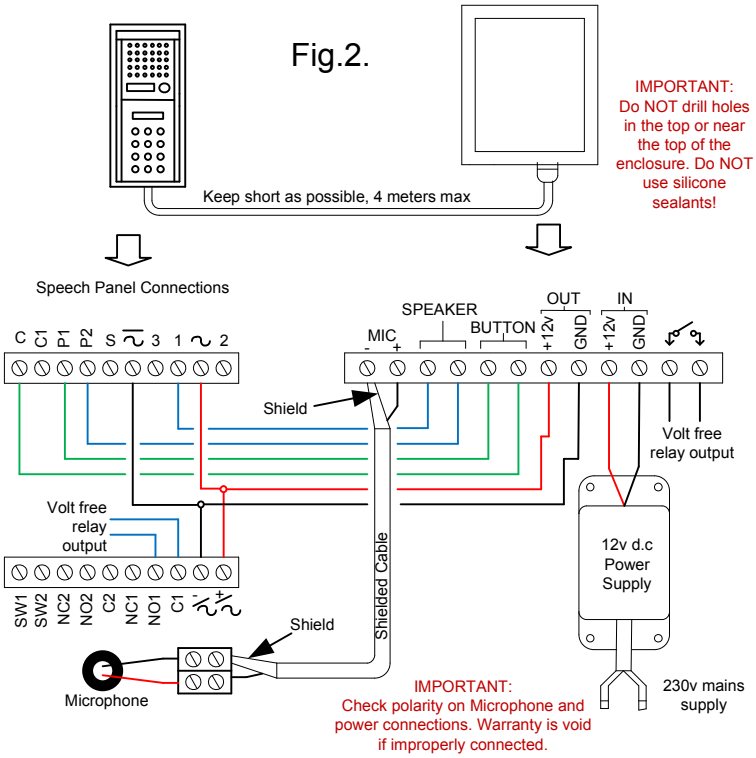

Installing SIM card

6) Before installing SIM card, switch **OFF POWER**, ensure that the card has been registered, activated, and has some calling credit. Check it works in a mobile phone first.

Fig.3.

IMPORTANT: The SIM card holder is FRAGILE. Do NOT force. Do NOT use a screwdriver.

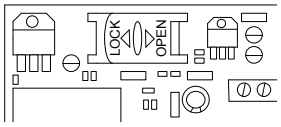

WARNING: Installing or removing the SIM card without first switching off the power will cause damage to this unit!

7) Carefully slide the SIM holder door in the OPEN direction as shown in Fig 3. Slide the SIM card into the holder, and close the door, sliding it in the LOCK position.

8) After a final check of wiring, switch on the power to the system. There are 2 LED indicators on the module. 1 is for power, and the other is for GSM network detect.

Please allow 20-30 seconds for the unit to boot up and detect the network. Once successful connection has been made, the unit will sound a confirmation tone and the status LED will begin flashing. If there is a fault or problem, the unit will emit a series of bleeps or warning tones.

Programming

9) Call the SIM card telephone number. The device will answer the call and you will hear a bleep.

10) Enter programming mode by pressing..

* 1 2 * 1 2 3 4 # (1234 is default password)

A successful pass code will produce a single long tone. A failed attempt will produce 3 short bleeps.

11) You may now program up to 3 telephone numbers into memory for the unit to dial when the call button is pressed.

1 1 Enter 1st telephone number here #

1 2 Enter 2nd telephone number here #

1 3 Enter 3rd telephone number here #

12) It is recommended to change the "no answer" time if there is more than 1 number stored. This stops the unit ringing a number after a set time, and can be used to prevent voicemail answering the call.

5 2 ? ? #

(?? = 10-99. This is 10-99 seconds and may need to be adjusted. Default = 20 seconds)

Additional Features...

13) The following list contains the complete list of parameters that can be set by programming..

Change programming password (default 1234)
0 1 * ? ? ? ? #

Change output relay N/O or N/C *(N/O=1, N/C=2, default = N/O)*
? #

Microphone volume *(? = 1-4, default = 3)*
4 ? #

Speaker volume *(? = 1-4, default = 3)*
3 ? #

Relay activation time *(? = 1-9, default = 1, Note 1=0.5sec)*
5 1 ? #

Change relay activation key *(? = 1-9, * or #. Default = *)*
6 1 ? #

Max call time *(?? = 05-99, default = 60)*
5 3 ? ? #

Restore Defaults
9 9 9 #

Access Control by Phone

14) The 3E range can allow users to gain access from their mobile phone by two methods, 1 – Caller ID recognition to open the door or gate at no call cost to the user, and 2 – by password mode.

For this feature, use the following commands to program the unit...

Add a number (up to 100 numbers)...
7 2 Telephone number #

Delete a number...
7 3 Telephone number #

To delete all numbers...
7 3 * #

Insert international country code (1-3 digits)
7 1 Country code #

Any numbers programmed will now automatically open the gate/door when they ring the intercom SIM card number.

Change access control password for telephone numbers not stored... (default 5678)
0 2 * ? ? ? ? #

Keypad Programming (only for Keypad model)

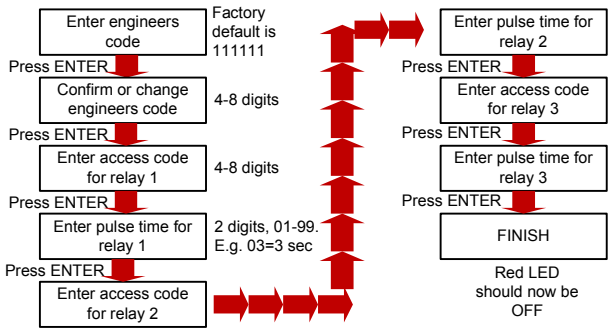

Operation and Testing

15) Press the call button on the speech panel. You should hear a tone. The unit will ring the first telephone number programmed.

16) Answer the call and check for two way voice. Activate the relay by pressing the * key and hang up.

17) To open the gate/door by password, ring the unit. If the number is not stored in the access control section, then the unit will answer the call. Enter *33* password # to activate the relay (default password = 5678).